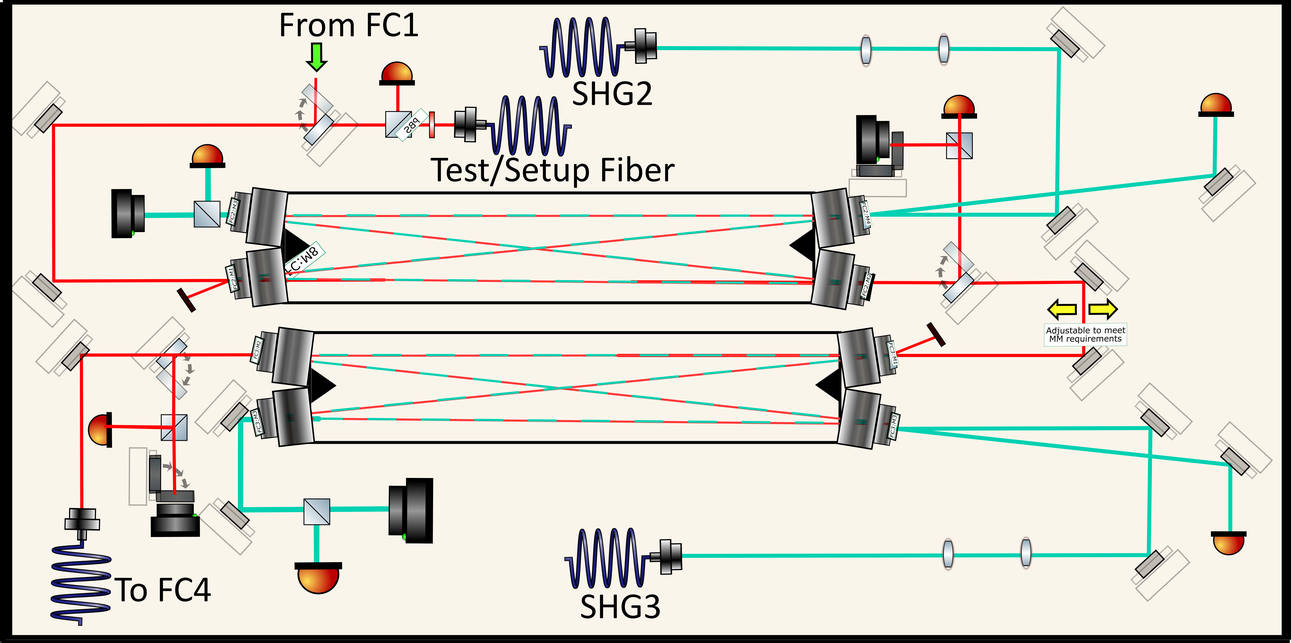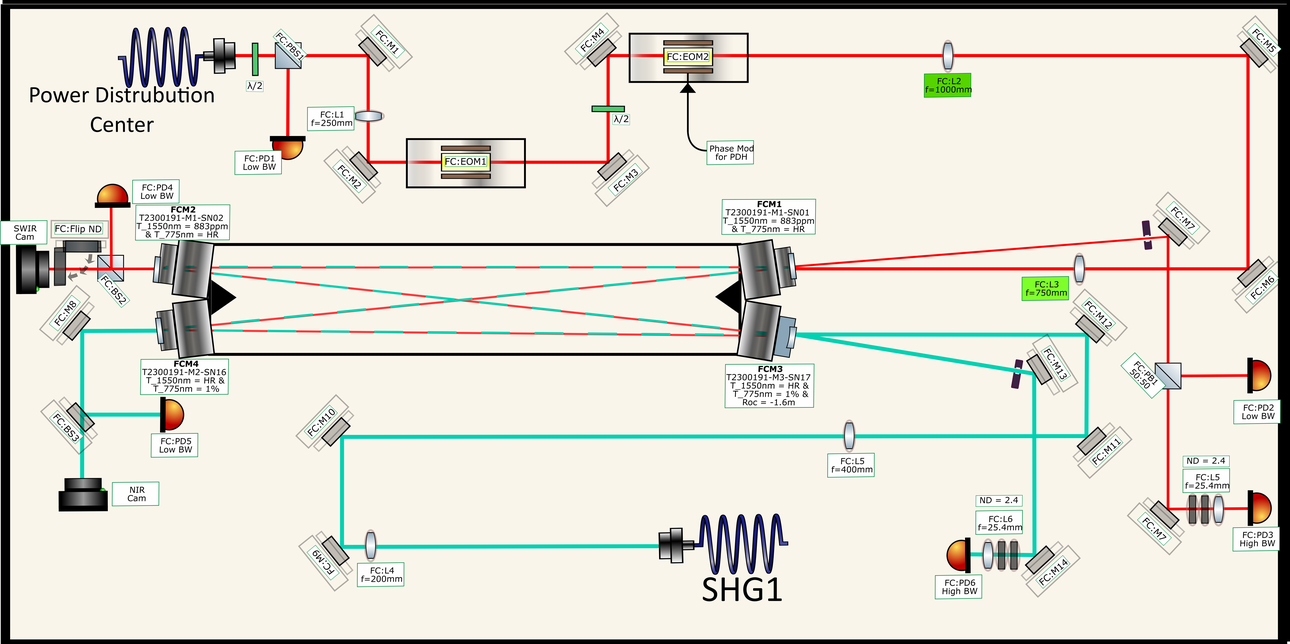Filter Cavities 1,2 and 3